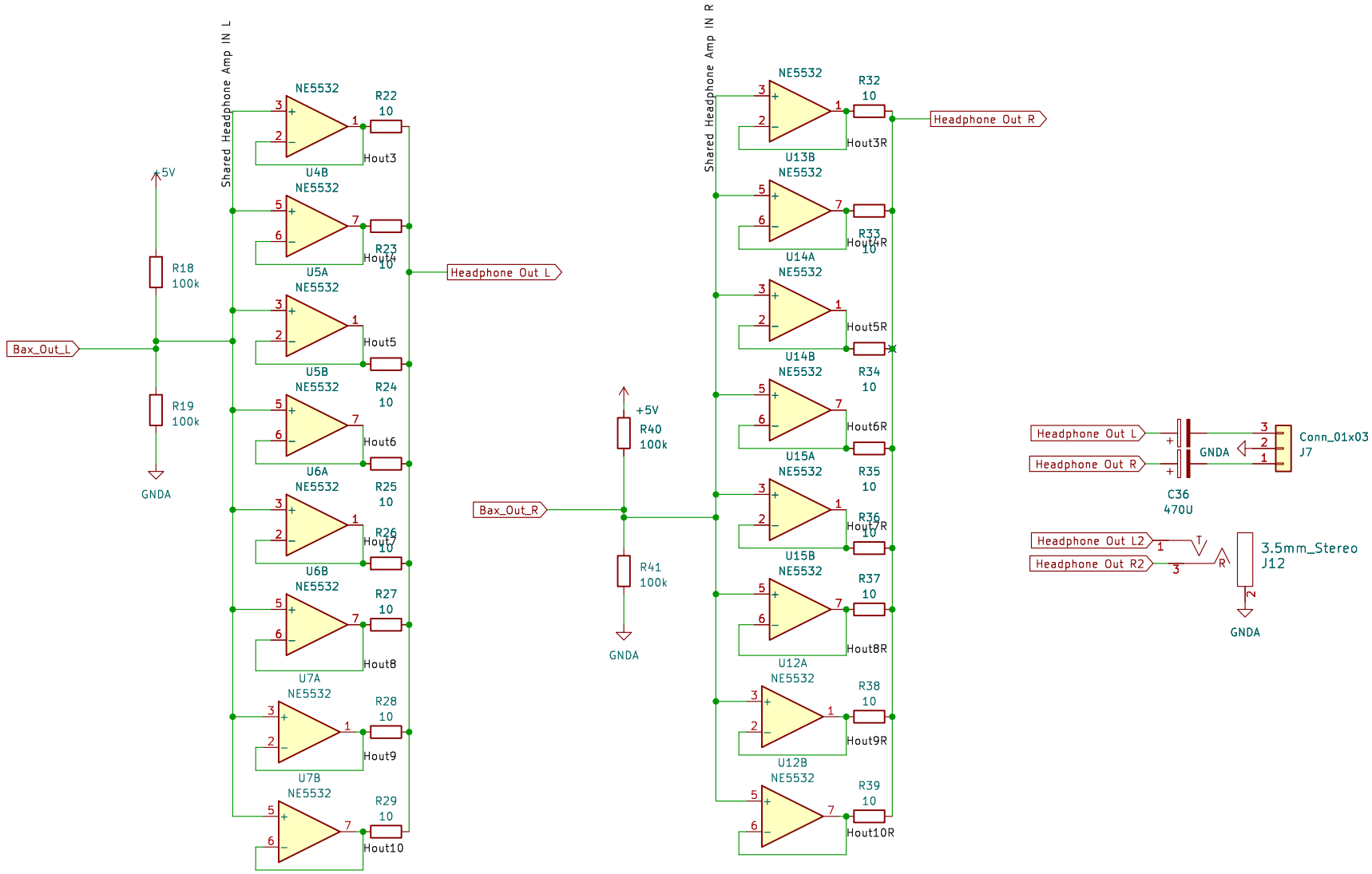

Sheet: /Phones/
File: phones.kicad_sch

Title:

Size: A4	Date:	Rev:
KiCad E.D.A. kicad 7.0.2		Id: 6/7